TRI-TRONICS®

Smart Sensing Solutions Since 1954

COLOR SMARTEYE® MARK II

Registration Mark Sensor

Registration Mark Sensor

The *SMARTEYE®* COLORMARK™ II

Registration Mark Sensors combine unique color perception ability with very high speed response. Many important features have been incorporated into the design to meet the increasing demand for precision registration control on today's higher speed packaging machinery.

The specific task of a photoelectric registration mark detector is to respond to printed registration marks on packaging material as they pass through the sensor's light beam. The output of the sensor must switch when the mark arrives precisely in position for the control function to occur. The resolution of the exact location of each passing registration mark is keynote to ensure that the initiation of the electromechanical response triggered by the sensor is in synchronization with the arrival of the mark.

The high speed (50 microseconds) response time of the ***SMARTEYE®* COLORMARK™ II** helps to ensure that the point of detection of the sensed mark will not shift as the velocity of the moving web varies from slow startup to maximum velocity.

Color perception is a must for detecting registration marks printed in a wide variety of colors. The ***SMARTEYE®* COLORMARK™ II** is recommended for detecting the greatest variety of color of marks and is equipped with a unique combination of white LED light source and photodetector. In addition, there are ***SMARTEYE®* COLORMARK™ II** sensors equipped with red, green or blue LED light sources that are useful in other applications when the preferred white light source fails to perform; i.e., a blue LED light source is recommended to detect pale yellow marks on a white background. Consult selection guidelines to help in specifying the correct ***SMARTEYE®* COLORMARK™ II** to fit your sensing requirements.

Features

- Built-in Connectors
- Waterproof Housings
- Clutch Knob Adjustment (Offset/EDR®)
- Unique 10 LED Contrast Indicator
- Addition of EDR® "Enhanced Dynamic Range"– eliminates hot spot glare effects. Works on the shiniest materials, including foils.
- Optional Pulse Stretcher guarantees a minimum of 10 milliseconds output – ample time for visual LED verification and for the control to respond.
- Choice of light source – green, red, blue, or white.

Benefits

- Minimizes downtime
- Flexible and accommodating for a variety of registration materials and marks
- Easily adjusted for optimum performance
- Very accurate and repeatable with unnoticeable migration from start up to full speed
- High Quality and High Reliability

Application Setup Guide

Registration Mark Sensing Using Fiberoptic Light Guides

Opaque Material (Non-Foil)

1. Position the fiberoptic light guide to view material looking straight down (see Fig.1).
2. Place background in view of fiberoptic light guide.
3. Adjust "offset" as follows...

   A. For dark mark on light background, adjust for a reading of "10" on the Contrast Indicator with the background in view.

   B. For light mark on dark background, adjust for a reading of "1" on the Contrast Indicator with the background in view.
4. Set light/dark switch in the position that turns the "mark" indicator off.
5. Move mark into view. Note the new contrast reading. If this reading has deviated from the initial reading by 4 to 5 bars or more, enough contrast exists for proper detection.

Foil Material

1. Position fiberoptic light guide as follows:
   A – For a black or dark mark on shiny foil, position light guide to view material looking straight down (see Fig. 1).
   B – For white or light mark on shiny foil, position light guide to view material looking on a 45° angle (see Fig. 2).
2. Place mark in view of fiberoptic light guide.
3. Adjust "offset" as follows:
   A – For black or dark mark on shiny foil, adjust for a reading of "1" when the black mark is in view.
   B – For white or light mark on shiny foil, adjust for a reading of "10" when the white mark is in view.
4. Set light/dark switch in the position that turns the mark indicator "ON" when the mark is in view.
5. Move mark out of view. With the background in view, note the new contrast reading. If this reading has deviated from the initial reading by 4 to 5 bars or more, enough contrast exists for proper detection.

Transparent Material

1. Position fiberoptic light guide to view material looking straight down.
2. Place background (transparent area) in view of fiberoptic light guide.
3. Adjust "offset" for a reading of 9 or 10 on the Contrast Indicator.
4. Set light/dark switch in the position that turns the mark indicator off.
5. Move the mark into view. Note the new contrast reading. If this reading has decreased or deviated from the initial reading by 6 to 8 bars or more, enough contrast exists for proper detection.

Hints and Tips:

1. False tripping or erratic operation is usually caused by excessive web flutter, wrinkles or variations in material back ground color or marks. Minor adjustments of the "offset" can help to eliminate erratic operation.
2. If the surface of opaque (non-foil) material is extremely shiny, consider placing fiberoptic light guide into the 45° angle position (see Fig. 2). The position that results in the maximum contrast deviation as displayed on the Contrast Indicator will give the most reliable performance.
3. A metal guide plate for the material to flow across provides several necessary advantages:
   A – Helps to iron out wrinkles.
   B – Helps to eliminate web flutter.
   C – Provides shiny background when sensing marks on transparent material.

Fig. 1 Straight Position

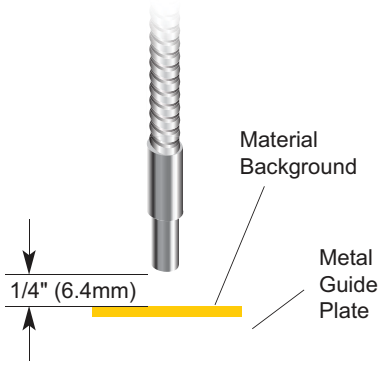

Fig. 2 45º Angle Position

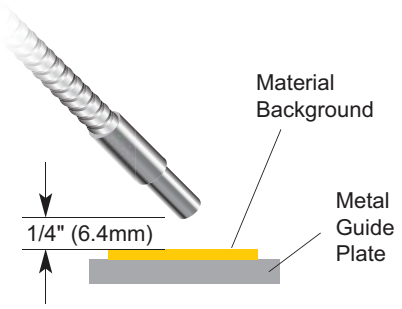

Selection Guidelines

Fiberoptic Models

Lensed "V" Axis Models

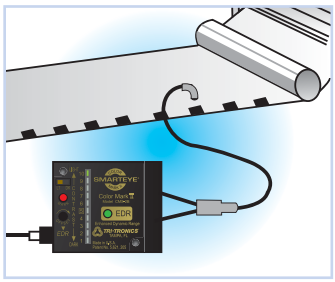

Preferred Mode: Fiberoptic Reflective (Proximity)

Based upon the characteristics of the web material, the printed mark and the sensing site conditions, the following guidelines will help to select the proper **SMARTEYE® COLORMARK™ II** to fit your sensing needs.
Sensor: Model CMSWL-1BF1 (with Pulse Stretcher) or Model CMSWL-2BF1 (w/o Pulse Stretcher). White Light Source.
Cable: Shielded cable w/connector. Right angle or straight mating connectors available.
Fiberoptic Light Guide: Model BF-A-36T (straight) or Model BF-A-36RT (right angle) as shown above. See Fiberoptic Light Guides section for availability in a wide variety of bundle sizes and shapes.
Sensing Range: From 1/4 to 3/8 in. Optional lenses can be used to extend sensing ranges.
Accessories: Mounting Bracket: Model SEB-1

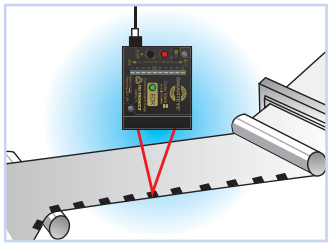

Alternate Mode (A): Convergent Beam "V" Axis

Optional choice to detect printed registration marks on opaque or translucent packaging materials.
Sensor: Model CMSWL-1BV1G (with Pulse Stretcher) or Model CMSWL-2BV1G (w/o Pulse Stretcher). White light source.
Cable: Shielded cable w/connector. Right angle or straight mating connector available.
Sensing Range: 1 in.
Accessories: Mounting Bracket: Model SEB-1

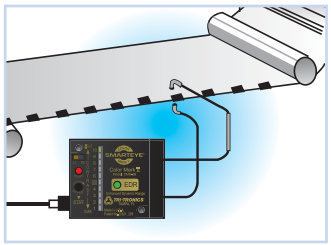

Alternate Mode (B): Fiberoptic Thru-Beam

Good choice to detect printed registration marks on transparent packaging material.
Sensor: Model CMSWL-1BF1 (with Pulse Stretcher) or Model CMSWL-2BF1 (w/o Pulse Stretcher). White light source.
Cable: Shielded cable w/connector. Right angle or straight mating connectors available.
Fiberoptic Light Guide: Model (2) F-A-36T (straight) or Model (2) F-A-36RT (right angle). See Fiberoptic Light Guides section for availability in a wide variety of bundle sizes and shapes.
Sensing Range: Recommended 2 to 3 in.
Accessories: Mounting Bracket: Model SEB-1

Features

LIGHT/DARK SWITCH
Light ON/Dark ON selector switch

OUTPUT INDICATOR
Illuminates when outputs are "ON".

OFFSET/EDR KNOB ADJUSTMENT
Sets initial level in relation to switch point of "5" on CONTRAST INDICATOR– also functions as a sensitivity adjustment
Controls EDR® which functions to avoid glare effect

CONNECTION
M12 4-pin connector

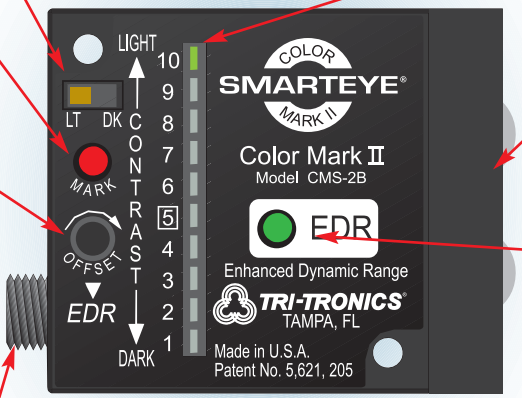

10 LED CONTRAST INDICATOR
Provides "at-a-glance" analysis of the sensor's response to Light State vs Dark State sensing conditions.

INTERCHANGEABLE OPTICAL BLOCKS
Choice of 7 Optical Blocks - O1, O1G, O2, R1, F1, V1, V1G

EDR INDICATOR
Intensity of GREEN LED provides indication of where in the dynamic operating range the offset, EDR® adjustment has been set.
- FULLY LIT: Operating near saturation
- OFF: Operating near maximum sensing range

How To Specify

1. Select sensor model based on light source required:
CMS = Green
CMSR = Red
CMSB = Blue
CMSWL = White

2. Select Pulse Stretcher required:
-1B = 10ms Pulse Stretcher
-2B = No Pulse Stretcher
-2BT = with toggle switch

3. Select Optical Block based on mode of sensing required
F1 = Fiberoptic
Range: 1/4" to 3/8" Proximity Mode
1/2" to 3" Opposed Mode
VIG= 1" V-Axis Glass Lens
Range: 1"

Example: CMS WL -1B F1

COLORMARK™ II
Light Emitter
Pulse Stretcher
Optical Block

Hardware & Accessories

4-Wire Shielded MicroCable, M-12

SEC-6
6' (1.8m) cable

SEC-15
15' (4.6m) cable

SEC-25
25' (7.62m) cable

RSEC-6
6' (1.8m) cable/right angle connector

RSEC-15
15' (4.6m) cable/right angle connector

RSEC-25
25' (7.6m) cable/right angle connector

4-Wire Extension Cable, M-12

BX-10
10' (3.1m) extension cable

BX-25
25' (7.62m) extension cable

Mounting Brackets

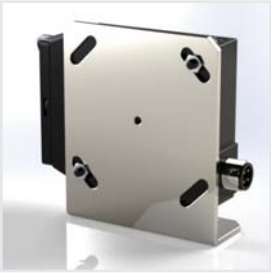

SEB-1
Stainless "L" Bracket

FMB-1 (8.4 mm diam.)
Standard Fiberoptic

FMB-2 (5.1 mm diam.)
Mini Glass Fiberoptic

FMB-3 (3.1 mm diam.)
Mini Plastic Fiberoptic

Specifications

SUPPLY VOLTAGE
- 12 T0 24 VDC
- Polarity Protected

CURRENT REQUIREMENTS
- 85mA (exclusive of load)

OUTPUT TRANSISTOR
- (1) NPN and (1) PNP output transistor
- NPN: Sink up to 150mA
- PNP: Source up to 150mA
- Momentary short circuit protected
- Output transistors turn "ON" when mark is in view
- Anti-pulsing on power-up

RESPONSE TIME
- Minimum duration of input event:
- Light state response: 50 microseconds
- Dark state response: 140 microseconds
- Leading edge variation: less than 20 microseconds

HYSTERESIS
- Less than 400 millivolts for maximum sensitivity and resolution

LED LIGHT SOURCE
- Choice of color:
  A. White - Broadband Spectrum (CMSWL)
  B. Green - 550nm (CMS)
  C. Blue - 480nm (CMSB)
  D. Red - 660nm (CMSR)

LIGHT IMMUNITY
- Pulse modulated to provide extremely high immunity to ambient light

PULSE STRETCHER TIMER (Optional)
- Provides minimum of 10 milliseconds output duration

OFFSET/EDR® CLUTCH KNOB ADJUSTMENT
- Sets initial level on Contrast Indicator in relation to mid-scale switch point of 5 – functions as sensitivity adjustment
- Controls Enhanced Dynamic Range circuit (EDR®) which functions to avoid glare effect

LIGHT/DARK SWITCH
- Dark position for dark mark; Light position for light mark

INDICATORS
- OUTPUT INDICATOR - Red LED illuminates when output transistors are "ON"
- EDR INDICATOR – Intensity of Green LED provides indication of where in the dynamic operating range the offset / EDR adjustment has been set FULLY LIT: Operating near saturation OFF: Operating near maximum sensing range
- CONTRAST INDICATOR –Displays returned contrasting light levels (background vs. mark)

AMBIENT TEMPERATURE
- -40°C to 70°C (-40°F to 158°F)

RUGGED CONSTRUCTION
- Chemical resistant, high impact polycarbonate housing
- Waterproof, ratings: NEMA 4X, 6P and IP67
- Epoxy encapsulated for mechanical strength

RoHS Compliant
Product subject to change without notice
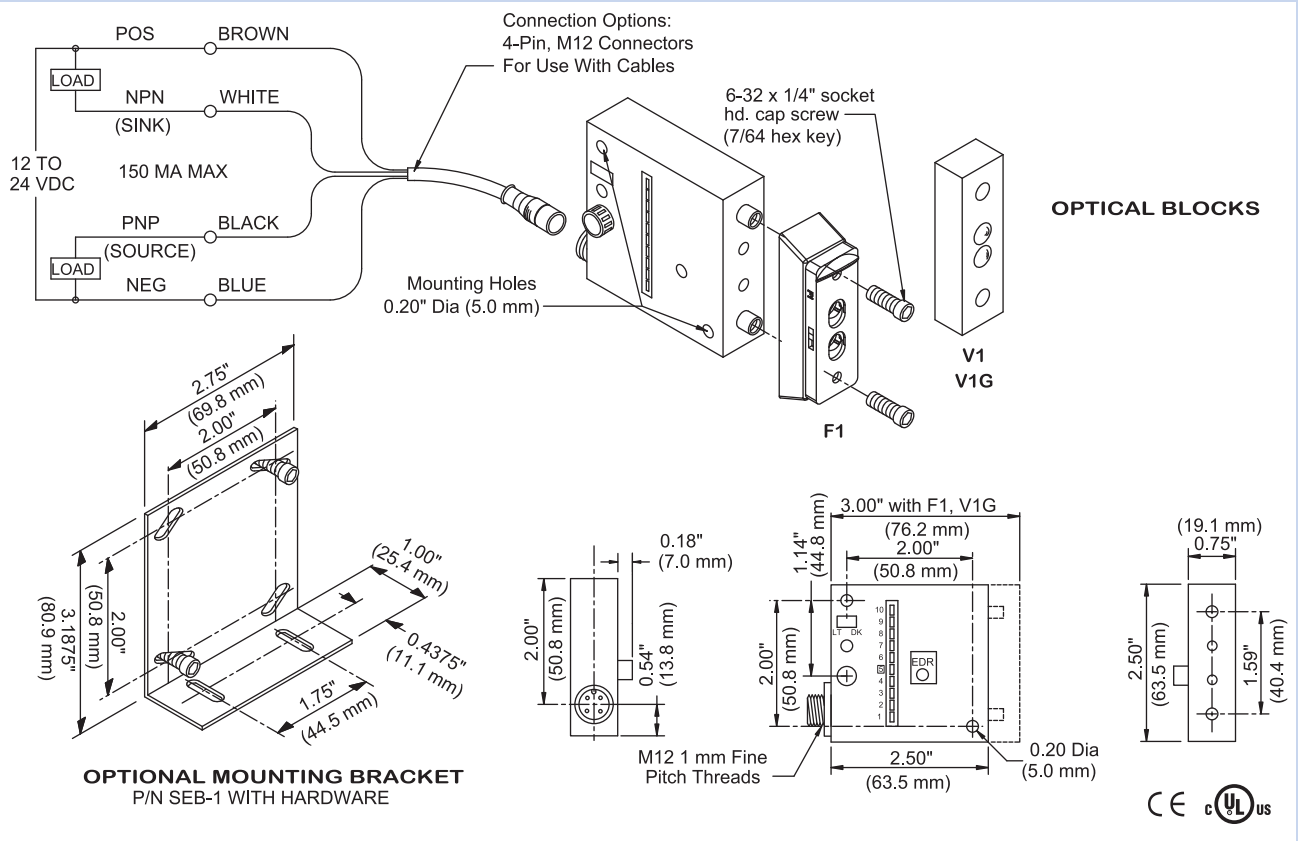
Connections and Dimensions — SMARTEYE® COLORMARK™II